Fixed vertical swivel folding bar with floor support leg and roll holder. Length 780 mm. Stainless steel. polished finish

Description

- Folding support bar with roll holder.
- It has a folding leg for a better grip.
- Space saving and locking in vertical position.
- Designed for toilets adapted for people with disabilities.
- Stainless steel gloss finish.

Technical characteristics

Material: Stainless steel
Finishing: Brightness
Dimensions: 780 mm length, 770 mm height and 1.5 mm thickness
Bar diameter: Ø32 mm

Suggested text for prescription

VELTIA support bar or equivalent, with vertical pivot in stainless steel AISI 304 with folding support leg to the floor and roll holder. Dimensions: 780 mm length, 770 mm height, Ø bar 32 mm and 1,5 mm thickness.

Fixing

Fixing plate with 6 wall anchorage points. Screws included.
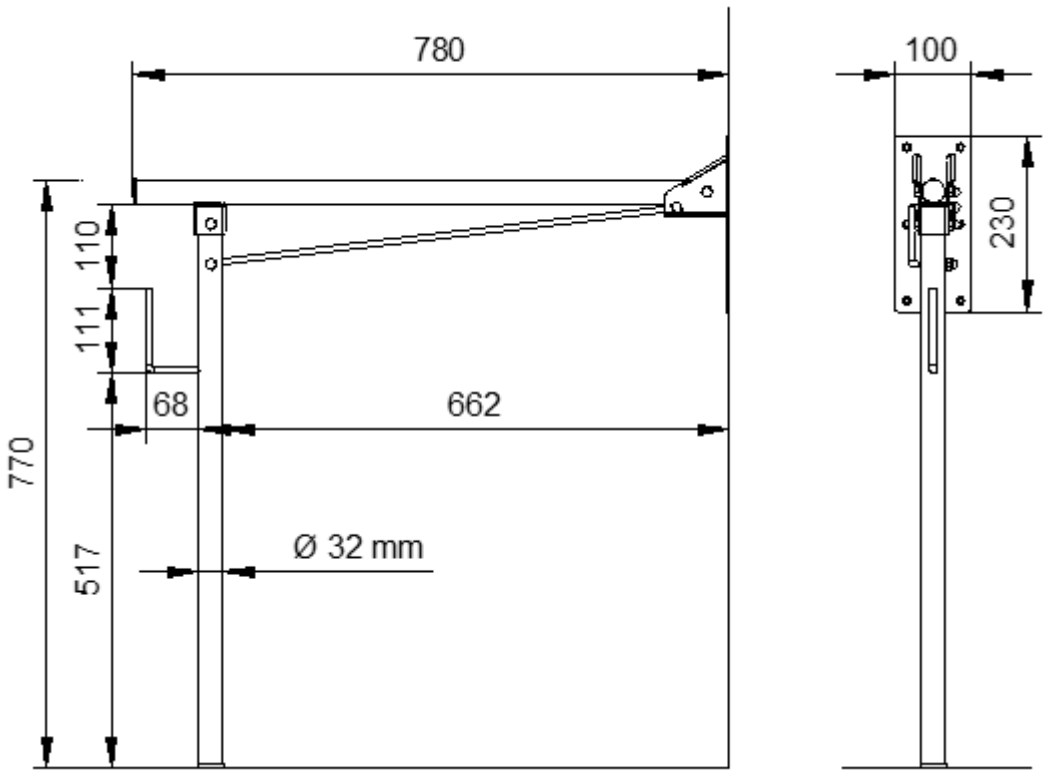
Dimensional drawing